XTREME SERIES - TOP MOUNT CONTROL

APPLICATIONS

Dual-function control - one lever controls throttle and shift. For nearly any engine

FEATURES

- All controls include start in gear protection
- Designed for use with both 3300/33C universal and OEM shift and throttle cable connections
- Suitable for most single engine/single station combinations
- Can be used in dual station boats with the DS unit
- Optional neutral interlock available
- Trim & Tilt options available
- Drag adjustment on all models
- Easy installation and set up
- Neutral “warm up” button for throttle only operation
- Designed and assembled in the USA

CHX8151P Pictured

The ergonomics and features of our Xtreme controls are advanced beyond those of any other control on the market.

A shapely, balanced handle design provides an incredibly smooth yet positive feel. Neutral throttle warm-up, start-in-gear protection features are standard on all Xtreme models, with neutral interlock and power trim/tilt offered as an option. In addition the cosmetics of these controls can be configured to many tastes.

Xtreme controls are suitable for use with both 3300/33C universal or OEM type control cables without the need for additional adaptors.

The handle is on the left side of the bezel.

When properly installed, these engine controls will connect to outboard, stern drive and inboard engines, utilizing Mercury/Mariner® and OMC® OEM type control cables as well as 3300/33C universal type cables and engine connection kits.

ORDER INFORMATION

OPTION - BLACK	PART No.
Single Top Mount Control - Lever on the Left	
Xtreme Single Top Mount Control, Black (no Neutral Interlock on Handle)	CHX8640P
Xtreme Single Top Mount Control, Black, Trim Switch (no Neutral Interlock on Handle)	CHX8641P
Xtreme Single Top Mount Control, Black, Trim Switch, Tilt Switch (no Neutral Interlock on Handle)	CHX8642P
Xtreme Single Top Mount Control, Black with Neutral Interlock on Handle	CHX8650P
Xtreme Single Top Mount Control, Black with Neutral Interlock on Handle, Trim Switch	CHX8651P
Xtreme Single Top Mount Control, Black with Neutral Interlock on Handle, Trim Switch, Tilt Switch	CHX8652P

Issue Date - Oct 2016
Issue Number - mcda4

XTREME SERIES - TOP MOUNT CONTROL

OPTION - CHROME	PART No.
Single Top Mount Control - Lever on the Left	
Xtreme Single Top Mount Control, Chrome (no Neutral Interlock on Handle)	CHX8140P
Xtreme Single Top Mount Control, Chrome with Trim Switch (no Neutral Interlock on Handle)	CHX8141P
Xtreme Single Top Mount Control, Chrome with Trim Switch, Tilt Switch (no Neutral Interlock on Handle)	CHX8142P
Xtreme Single Top Mount Control, Chrome with Neutral Interlock on Handle	CHX8150P
Xtreme Single Top Mount Control, Chrome with Neutral Interlock on Handle, Trim Switch	CHX8151P
Xtreme Single Top Mount Control, Chrome with Neutral Interlock on Handle, Trim Switch, Tilt Switch	CHX8152P

TECHNICAL DATA

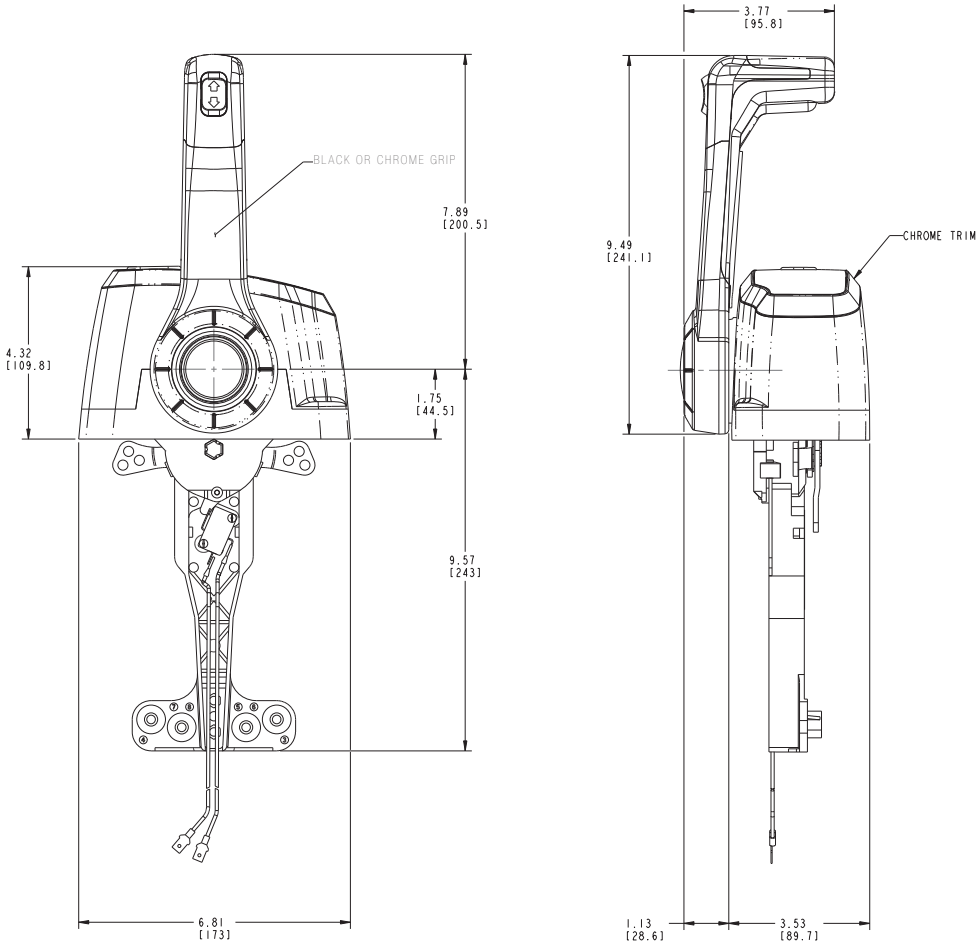

CHX81/6XXP Hole Cutout

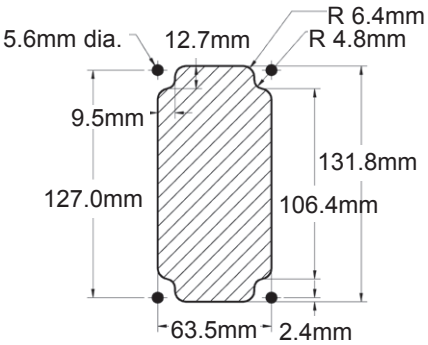

Issue Date - Oct 2016
Issue Number - mcda4